AXOR

Bodyspray Square
Finishes : **brushed gold optic** Part no. : **28469251**

Features

- Shower head size: 65 mm
- Flow: 2.5 GPM (9.5 L/Min)
- ½" NPT
- Material: Metal

Item details

List Price	$ 375.00

Technology

Quick Clean

Compliance

UPC C ®

Product image
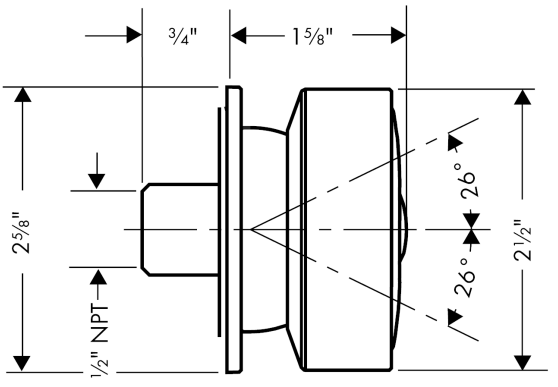
Scale drawing